Operating Manual
CENTOR EASY
V3.39

ANDILOG Technologies - BP62001 - 13845 Vitrolles Cedex 9 - France
E-mail : info@andilog.com Web : www.andilog.com
Ph : +33(0)442 348 340 – Fax : +33(0)442 348 349

I. Presentation 2
II. Handling 2
III. Recommendation before first use 2
1. Sensor 2
2. Test Stand 2
3. Conditions 3
4. Battery 3
IV. Presentation of your force gauge 4
1. Front panel scheme 4
2. Starting your force Gauge 5
3. Display mode 6
4. Zeroing 6
5. Measure unit 7
6. Peak values 7
7. Backlit 7
V. Advanced features 8
1. Limits 9
2. Display 10
3. IN / OUT 11
4. RS232 12
5. Statistics and memory 13
6. System 15
VI. Associated products 16
1. Manual or motorised test stands 16
2. Gripping accessories 16
3. Acquisition software 16
4. Interface Cables 16
VII. Appendices 17
1. Key action 17
2. Save and load a setting 17
3. Error Messages 17
4. Factory Settings 18
5. Connections 19
6. Dimensions 20

Revision	Date	Description
3.39	06.06.2016	Subd 15 I/0
Rev. 3.30	12.11.2013	

I. Presentation

Thank you for choosing the CENTOR Touch gauge manufactured by Andilog Technologies.

This force gauge is the result of 25 years experience in force and torque measurements with new electronic technologies offering a higher-performance and more reliable instrument.

Though it is a very comprehensive instrument, the CENTOR EASY force gauge is easy to use. This instruction manual will guide you to set your first measurements.

II. Handling

CAUTION - Unpacking: Your CENTOR EASY force gauge has been supplied in its carrying case. Check that it has not been damaged during transportation. If you have any doubt, please contact us, and our service support will you guide you through simple checks to ensure that the gauge has not been damaged.

Unpacking: The CENTOR EASY force gauge is supplied with:

- Carrying case
- Extension rod (Internal sensor only)
- Hook (Internal sensor only)
- Compression plate (Internal sensor only)
- Power plug adaptor
- Certificate of calibration

III. Recommendation before first use

1. Sensor

Never connect accessories (hook, plate . . .) directly to the sensor rod. Use the extension rod delivered with your instrument.

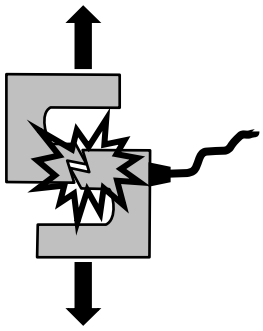

In spite of its mechanical protection, sensor overload can damage the instrument. The instrument stops if the capacity has been exceeded 10 times. You have to return it to ANDILOG TECHNOLOGIES for checking.

It is important that measured values are under 90% of the sensor capacity.

2. Test Stand

The gauge can be affixed to a test stand via two M5 screws, which should not extend through the back cover more than 3 mm. Please contact ANDILOG Technologies if you need more information or if you need a fixture to mount your force gauge to a test stand.

3. Conditions

- Working Temperature: 0°C to +35°C
- Stock Temperature: -20°C to +45°C
- Humidity: 5% to 95%
- Altitude: 3000m

4. Battery

The battery life is 8 hours under a normal use. The gauge should be charged after normal use. You should charge it every 3 weeks, to ensure a maximum life time of the batteries.
It is recommended to use the original power adaptor supplied by ANDILOG Technologies. The power adaptor has the following specifications: 12V, 0.85A

IV. Presentation of your force gauge

1. Front panel scheme

CONNECTOR 9 PINS OFF ON CENTOR EASY

CONNECTOR 15 PINS INCLUDING INPUTS / OUTPUTS OF CENTOR EASY

2. Starting your force Gauge

Press the I/O button the information screen showing the status of the CENTOR force gauge is displayed during 5 seconds, and then the main screen is displayed.

Model (EA,ST,DL)

Software version

Date of the day DD / MM / YYYY

3. Display mode

We describe here the screen following manufacturer settings, prepared by ANDILOG for delivery.

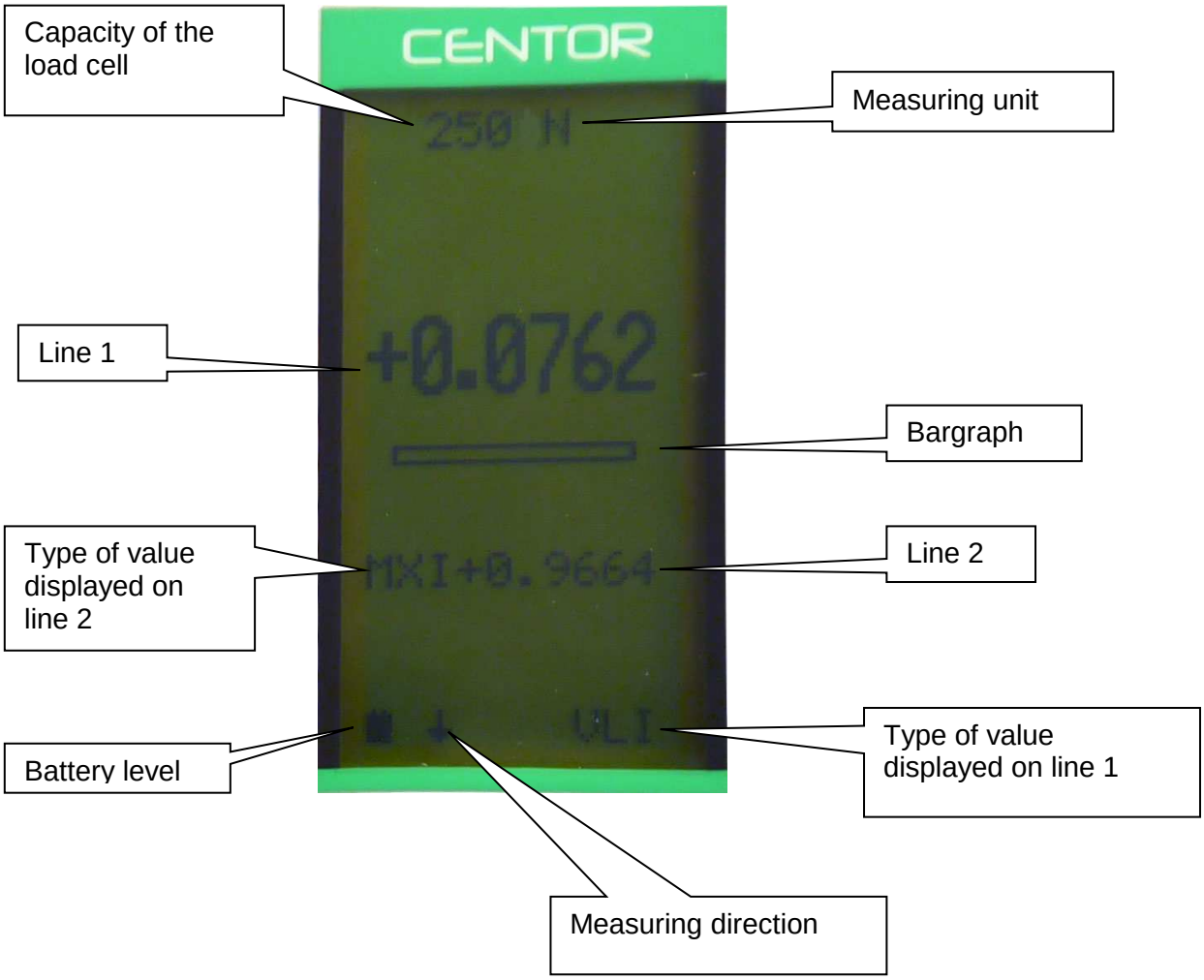

Note: On line 1 and line 2 you can display the following:

- VLI : current value
- MXI: Maximum
- MNI: Minimum

4. Zeroing

The "ZERO" button allows for the tare. The gauge will take into consideration the weight of accessories (hook or plate) fixed on the sensor's rod.
Pressing this button reset all memories, especially peak values.

NOTA: When turned on the CENTOR achieves several tests, especially to check the sensor's good state of health. It is possible to leave tools fixed on the force gauge, but the total weight must not exceed 20% of the sensor's maximum capacity.

5. Measure unit

To change the measure unit, just press “UNIT” button.
When the force gauge is tooled up with an external sensor, it detects the type of sensor connected and displays the corresponding units.

6. Peak values

The CENTOR automatically calculates peak values (maximum and minimum) and systematically displays them on line 2. Pressing “MAX” button makes max. value, min. value and current value successively display (as well as a calculation if it has been set).

7. Backlit

You can turn on the backlit by pressing “  ” button.
When using the force gauge on battery, the backlit turn automatically off after 3 min of operating. The total autonomy of the CENTOR will be reduced when the backlight is turned on.
When the gauge is used with the power plug, the backlight does switch off by pressing back on the backlight button.

V. Advanced features

CENTOR force gauge has several functions and settings, which makes it well adapted to the achievement of any test.
To optimize the force gauge operation compared to your application, we will study all the setting possibilities hereafter.

Parameters can be set via the setting menu by pressing the “ M ” button.
The setting screen appears and the keyboard functions change:

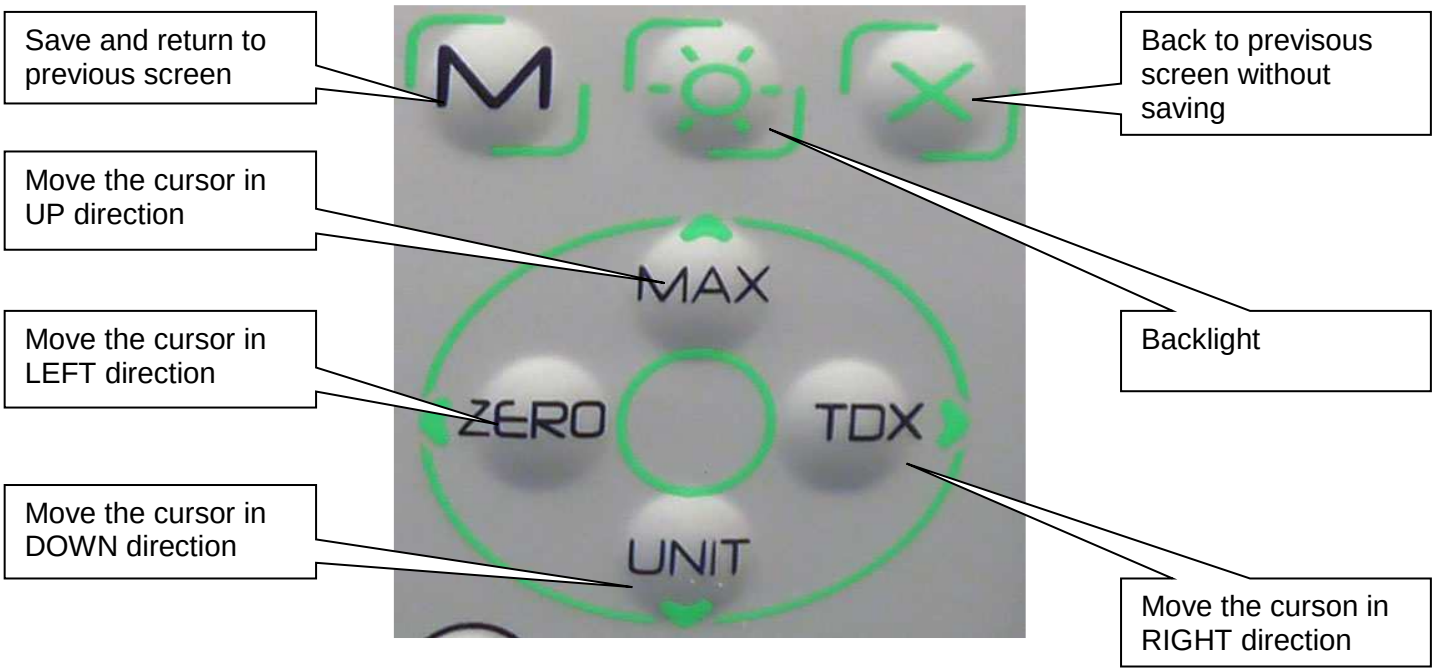

Settings screen:

MENU
CENTOR
LIMITS
DISPLAY
IN/OUT
RS232
STATS
SYSTEM
END **TDX**

LIMITS : set force thresholds to beep or display a message

DISPLAY : Screen settings

IN/OUT : set input and output of the force gauge

RS232 : set RS232 connection

STATS : Save your data

SYSTEM : general information of your force gauge

To move within the menu, uses “▲ MAX ” and “▼ UNIT” buttons
To select the required function, highlights it and press the “ ▶TDX” button.
To exit uses “M” button.

In the following screens, the operating mode is the same, however, in any other screen whatever the position of the cursor:

"X": switches to the previous screen cancelling the modifications.
"M": switches to the previous screen and saving the modifications.

Let see the force gauge functions one by one:

1. Limits

Thresholds allow defining limits and actions achieved by the force gauge when the limit value set is reached.

From Menu, highlight "LIMITS" and select with " ▸ TDX " button.

```
LIMITS

Chan. I    NO



MENU       TDX
```

From this screen you can choose to activate this feature.

Display "YES" or "NO" (using TDX and ZERO buttons) to activate or deactivate this feature.

Once the feature is activated, the parameters are displayed

```
LIMITS

Chan. I    YES
UNIT       N
T1:       +0001
T2:        0000
DEFAULT    INT
BEEP       NO
TYPE       VAL



MENU       TDX
```

UNIT : defines the unit chosen for the threshold

T1 : determines the value of first limit

T2: determines the value of the second limit

DEFAULT : defines if the faulty zone is inside or outside. INT the default zone is in between, inside T1 and T2. EXT the default zone will be not include in between T1 and T2

BEEP : beeping when values are in the default zone

TYPE : chooses on which value the threshold applied. VLI current value, MAX maximum, MIN minimum.

In the main measuring screen, the status line is modified: signs <<, = , >> are displayed, they display if the value is inside or outside the limits.

You can display the word “FAIL” or “PASS”; the setting is done in the “DISPLAY” menu.

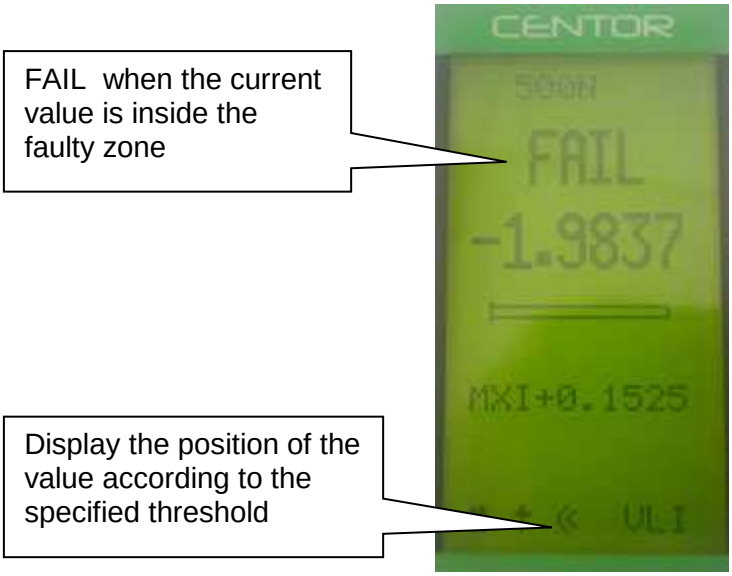

Note: This feature allows activating a TOR output on the 15 pins connector on the side of your device. The setting is done through the IN/OUT menu. (You can by example send a STOP signal to a motorized test stand)

Note: If only one threshold is necessary, max value for example, enter the max or min capacity of the sensor for the second threshold value.

2. Display

```
     DISPLAY

LINE1
LINE2
SIGN
DECIMA
BARGR
GONOGO

DIRECT
AUTOFF

MENU      TDX
```

Exit by pressing the “M” button to save your parameters.
From this menu you can entirely set the main screen.

Menu	Choice	Description
LINE 1	VLI, MXI, MNI	Set the display of the first line 1 : current value (VLI), Maximum (MXI), Minimum (MNI)
LINE 2	NO, VLI, MXI, MNI	Set the display of the second line 2 : None (NO), current value (VLI), Maximum (MXI), Minimum (MNI)
SIGN	NO, TRA, COM	Set if the sign is displayed and if yes the direction of the positive sign : tensile (TRA) or compression (COM)
DECIMA	0,1, 2, 3, 4	Number of decimals
BARGRA	YES, NO	Display the bar graph or not
GONOGO	NO, PAS, FAI	Display or not the word PASS or FAIL when the limit is reached
DIRECT	H, B	determines the direction of display, caution: the front panel buttons are not affected by this parameter
AUTOFF	NO, 5, 10, 15	Determines if force gauge stops if no button is activated after 5, 10, 15 min.

CAUTION: if Auto-off displays NO, we advise you to use the force gauge with the charger to avoid the measuring process being interrupted because of low battery condition.

3. IN / OUT

```
INPUTS

Pedal

OUTPUTS

Top1

Anal
Digi
RS232

MENU      TDX
```

The Centor EASY force gauge is equipped with a SubD15 pins connector on the side. You can use this connector to connect it to an external device in order to communicate. (See the appendix for pin numbers). You can either:

- Pedal: input to perform an action to the force gauge
- Top1: output sending signal 0 or 1 when threshold is reached
- Anal: analogue output at 100Hz on 10bits
- Digi: digimatic output, by example for printer
- RS232: input/output sending current values continuously, per request (pressing TDX button) or per computer action

Menu	Choices	Description
Pedal	TAR, MAX, TDX	Set the action of the pedal. It use a substitute to the action of pressing a front panel button : ZERO (TAR), MAX or TDX
Top1	O, F, I+, I-, M+, M-	Set the signal type sent through the TOR output : positive impulsion (I+), negative impulsion (I-), Change to positive state (M+) change to negative state (M-), Open (O), Closed (F)
Anal	INT, NO	Active or de-active the analog output
Digi	NO, VLI, MXI, MNI	Active the Digimatic output and set the value : current value (VLI), maximum (MXI, minimum (MNI)
RS232	NO, IMP, CON	Set the RS232 output and its type : continuous or per request imp (pressing TDX on the front panel button)

4. RS232

```
RS232 I/O

Bds
Par
Bits
Stop

Demand
CR
LF
Sign
Unit
DatHour

MENU        TDX
```

The first part of the screen defines the parameters of RS232 communication and can be modified via ▸ and ◂ buttons.
They must be identical to your computer settings.

Menu	Choices	Description
Bds	2400, 4800, 9600, 19200	Speed of the RS232 connexion.
Par	SANS, PAIR, IMPAIR	Parity
Bits	INT, NON	Activate or de-activate the analogue output
Digi	8	Number of bits
Stop	1, 2	Number of stop bits

The second part defines the characters sequence sent:

Menu	Choice	Description
Demand	F	Current Value
	P	maximum
	V	minimum
	C	Inactive
	T	Last 100 values in memory
	W	Inactive
	A	Inactive

The last part defines the accessories data that you can send:

Menu	Choice	Description
CR	YES, NO	Send a carriage return
LF	YES, NO	Send a newline
Sign	YES, NO	send the sign of the value
Unit	YES, NO	send the unit
DatHour	YES, NO	Send the date and hour of the value

5. Statistics and memory

The Centor Easy has a mode called “Statistical” allowing to perform a series a measurements and get quickly the mean and standard deviation.

a. Limitation

The memory of the force gauge is limited to 100 measurements; beyond it will be necessary to clear the first results to be able to add new ones.

b. Access

Access to this mode by: pressing “M” button, moving the cursor down to reach the line called “STATS” and entering the sub-menu by pressing the right arrow TDX button.

c. Display

```
Mes/Samp   1
Oper.     01
Unit       N
```

If no action has been carried out on SATS submenu, the screen allows you to configure three parameters:

- Mes/Samp: Number of measurement per sample
- Oper: Personal ID number of the operator
- Unit: Measurement unit

If measurements are saved in the memory, those three parameters are no longer available. The only way to access it again is by clearing the memory.

```
Mes/Samp   1
Oper.     01
Unit       N

STATS
Samp
Mea
StDev
S/M

001  +x.xxx
002  +x.xxx
003  +x.xxx
```

If measurements are saved, they are displayed at the bottom of the page, the cursor can move in the table.

The displayed data are as follow:

- The first number indicated the sample number, the second number is the measure itself
- If your samples contains more than one measurement (see parameter (Mes/Sample) so you have multiple rows with the same sample number

Also 3 statistical calculations are displayed:

- Mea: Average of the series of measurements
- StDev: standard deviation of the series of measurements
- S/M: Standard deviation divided by the average

d. Possible actions

If no data are saved, you can configure the three parameters described above. To do so place the cursor on the parameter and change the settings with the left and right button

If data are saved, you can:

- Review the result, moving the cursor in the table: up and down keys
- Delete the selected sample or the entire series: left button (ZERO)
- Send data : right button (TDX)

e. Erasing Procedure

```
ERASE?

M: ALL
<: SAMPLE
X: CANCEL
```

Press the left button (ZERO) to erase the selected sample or the complete set of measurements. If your sample includes several measures, they will be all deleted.

A sub menu is displayed, asking what need to be deleted:

- Clear the selected sample: left (ZERO)
- Clear the entire series: M button
- Do not erase: X button

Note: It is strictly impossible to recover deleted data

f. Switch to the measure mode

To start recording your measurements and using the statistical mode of the maximum values, **press the X button** and you will go directly to the measurement mode.
Press the M key to return to the main menu of the Centor without saving.

g. Measuring Mode

The measurement is performed by applying a force to the pressure sensor Centor. At any time the maximum is displayed in large characters on line 1. You can if you wish, display the current value instead of the maximum by pressing the top button (MAX).

When a measurement was made press right (TDX) to validate and save or left button (ZERO) to cancel and delete.

Once the measurement is recorded or deleted, the device is ready to perform a new measurement.

When you reach the maximum of 100 values, pressing the right key (TDX) no longer has any effect and a warning s is displayed. The memory is full.

Note that unlike the conventional use of the Centor unit is locked and will remain as you have set throughout your measurements. By pressing the UNIT key will have no effect.

h. Return to the STATS menu

To return to the STATS sub menu and displayed the results, press the M button.
Note: If you turn OFF the device will using the STATS mode, he will remains in the same mode when turn it back ON, and pressing the M key will display the STAT sub menu.

6. System

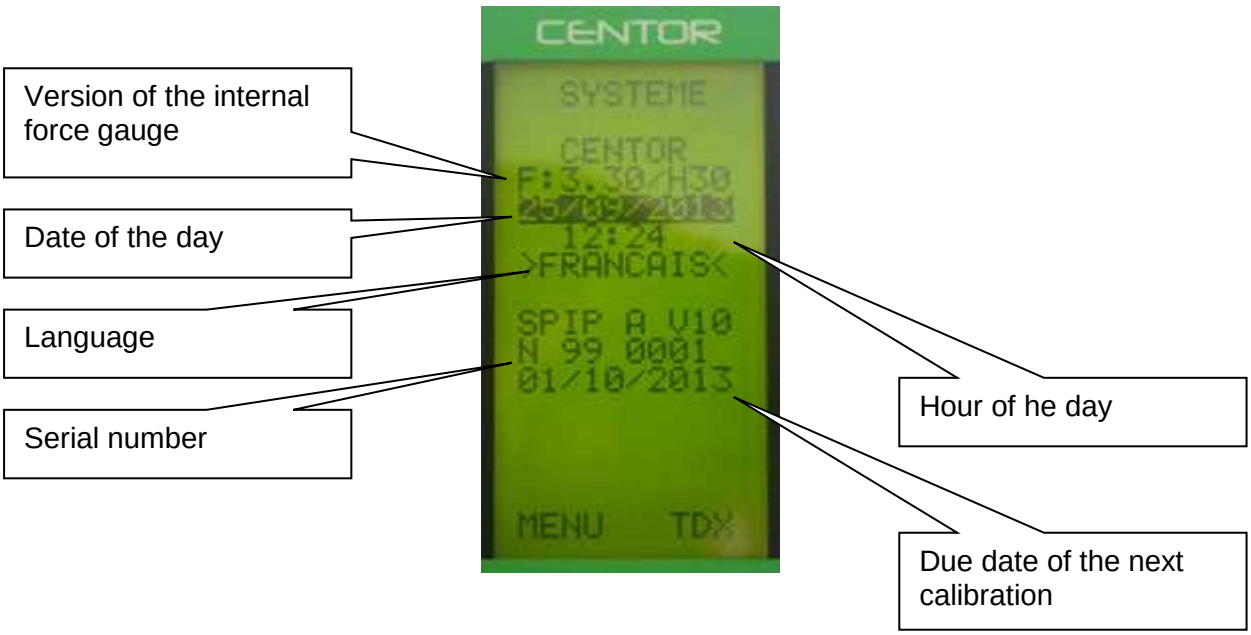

The following settings can be set: Date, Hour and Language

VI. Associated products

1. Manual or motorised test stands

To ensure a precise measurement, it is important that your CENTOR force gauge is placed in the axis of the force throughout the test. To ensure this placement is correct, ANDILOG and ANDILOG TECHNOLOGIES have developed a complete range of simple and sophisticated test stands.
These are manual or motorised test stands, some of them being computer-controlled.

If you want more information about test stands, contact your ANDILOG TECHNOLOGIES dealer or visit our web site www.andilog.com.

2. Gripping accessories

ANDILOG TECHNOLOGIES offers a series of gripping accessories adapted to different tests: hooks, plates, pliers, self-squeezing jaws, eccentric jaws, peeling fixture, etc…

If you want to receive our catalogue, contact your ANDILOG TECHNOLOGIES dealer.

3. Acquisition software

ANDILOG TECHNOLOGIES has developed several programs to save and analyse values.

You want to analyse values on a chart: RSIC software has been developed to this.

You want to capture the values graph and use graphics tools: CALIGRAF software goes further in tests analysis.

4. Interface Cables

Several interface cables can be used with CENTOR Easy force gauge:

External pedal: allows simulation of a keyboard button

Cable for analogue link (with male-female plugs): links your gauge to another system

Cable for Digimatic link: connect your gauge to a statistical printer

Cable for RS232 link: connect your gauge to a computer using the RS232 output

VII. Appendices

1. Key action

Button	Measure Mode	Menu Mode
ON/Off	Turn On & Off your device	Turn On & Off your device
M	Access to the menu mode	Exit and Save
O	Backlight	Backlight
X	Inactive	Exit without saving
MAX	Change the value displayed on line 2	Up
TDX	Send data through RS232 or save data to the STAT mode	Right
UNIT	Change the measurement unit	Down
ZERO	Zeroing the force gauge	Left

2. Save and load a setting

You can store a configuration, and reload it at any time. To do so, press the M key to go to the Menu mode then:

- Press ZERO and M to save the configuration
- Press TDX and M to reload the saved configuration
- Press X and M to load the factory configuration

3. Error Messages

The AUTOTEST screen displays if:

- The device detects a minor or major default when it starts
- In the SYSTEM sub menu, by pressing the keys: M and MAX

a. Minor defaults
   - Low battery level
   - Calibration is due
   - Backup battery is out of order

Press the MAX key to continue

b. Major defaults
   - Load cell is out of order: “Off” value is higher than 3%
   - Counter of overload reach its maximum value: “OVERL” value is higher than 10
   - Internal error

Please contact ANDILOG

4. Factory Settings

Feature	Value
LIMITS	
Chanel	NO
DISPLAY	
LINE1	VLI
LINE2	MXI
SIGN	TRA
DECIMA	4
BARG	YES
RAFF	N
DIRECT	H
AUTOFF	10
IN/OUT	
PEDALE	RAZ
TOP1	F
ANAL	NO
DIGI	NO
RS232	NO
RS232	
Bds	9600
Par	None
Bits	8
Stop	1
Demandd	F
CR	YES
LF	YES
Signe	YES
Unite	NO
DatHeur	NO

5. Connections

Detail of connector SubD 15 points of CENTOR electronic card

PIN	1	Not connected	
	2	Reset	To be connected to Ground for reset
	3	RS232	TXD
	4	RS232	RXD
	5	Digimatic	
	6	Digimatic	
	7	Digimatic	
	8	Digimatic	
	9	Output Force N°1	
	10	Output Force N°2	
	11	Input Force N°1	
	12	Input Force pedal	
	13	GROUND	
	14	Analogue output	
	15	GROUND	

6. Dimensions